Joseph Read

The Lighting Experts

MASTLIGHT II

Exterior up/down light

Product notes

Mastlight II exterior LED up/down light. A wall mounted fitting providing an up and down wash of warm light.

This fitting has two fixed optics. A matching exterior downlight to this fitting is the Mastlight I.

Made from solid bronze. Available in bronze finish and a choice 1w (1w up + 1w down) or 2w (2w up + 2w down). This fitting comes with a 120° beam angle.

Suitable for various exterior applications along walls and buildings including by entranceways.

Cut-out	45mm
Wattage	1 + 1w or 2 + 2w
Wiring	Series
Driver mA (not included)	350mA
Dimmable	Yes 1-10v or DMX
IP rating	IP65
Class	III – EN605981 Compliant

Available finishes	**Codes**
Bronze	W005B
Available output colours	
Warm White	
Available beam angles	120°
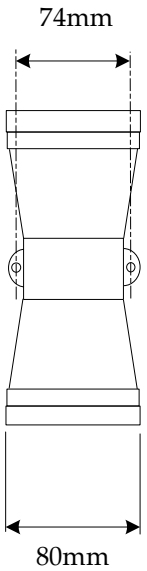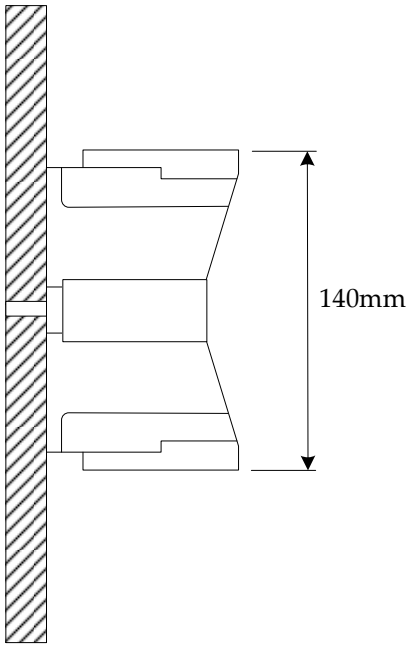
To order this product:
Use the product code W005B