DARLEK _RJ

Fixed

Joseph Read
Lighting & Home Cinema

Luminaire Details

Fitting Type	Tilt Down Light
Position	Ceiling
Enviroment	Indoor
Light Source	LED
IP Rating	IP20
Warranty	3 Years
Class	III
IP Zone	Zone 3
Standards	CE, EN605981
Material	Aluminium
Cable Type	0.5mm 2 cores
Cable Length	0.23m
Bezel Temp	Zone 1
Driver	Not Included
Hole Cut Out	38mm
Operating Temp	

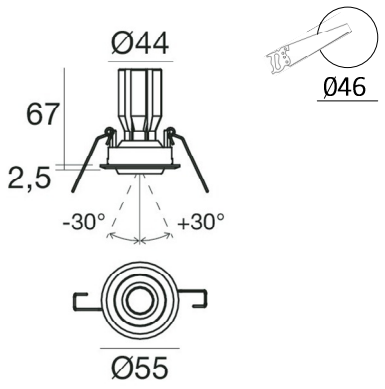

	3000K			
LIGHT VALUES	**SPOT**	**MEDIUM**	**WIDE**	**FLOOD**
Beam Width FWHM	**15°**	**30°**	**60°**	**120°**
Initial Lumens				
Engine Lumens		486		
Engine Lm/W		81		
Luminiare Cd				
Binning SDCM (Hot)				
DUV				
CRI (Ra)		**80**		
TM30 Rf Rg				
Lifetime (ambient)				
LUMINAIRE POWER				
Voltage		10.2v		
Drive Current		500ma		
Circuit Power (typ)		6W		
DRIVER				
Protocols	DALI / DMX / 0-10V / Non-dim			
Dim to Dark				
Distance from product	20m (Series Wiring)			
Emergency	No			

Specification Code

Engine type		Bezel		Colour Temp		Power		Beam Width		Bezel Colour		Baffle Colour		Options
LM	-	DAJ	-	W	-	6	-	30	-	W	-	X	-	FH
				W / 3000K		6 Watts		30 / Medium		W / White				FH / With Fire Hood X / Without Fire Hood

Joseph Read Lighting Limited
77 Dales Road
Ipswich
Suffolk IP1 4JR

info@josephread.co.uk

T: +44 (0) 1473 708 616